MISSION

B-VENT GAS FIREPLACES

Traditional
Fireplace
Design Collection

astria
FIREPLACES®

FEATURED Mission 36 shown with Black Interior with White Hearth and Split Oak Log Set

MISSION

From the stunning, unobstructed views of its dancing flames to the radiant beauty that only comes from advanced engineering, the Mission B-Vent Gas Fireplace offers the style and performance demanded by today's homeowners. Standard features like multi-dimensional refractory log arrangement and a deep glowing ember bed keep living areas cozy and inviting, while optional accessories like Extruded Aluminum Bi-Fold Glass Doors add style to any room. As versatile as it is beautiful, the Mission is the choice for affordable comfort without compromise.

Options

Interior

Choose from Black Interior with White Hearth, White Stacked, or White Herringbone to complement your decor.

Black Interior with White Hearth

White Stacked
(Back, sides and hearth)

White Herringbone
(Back, sides and hearth)

Choose from three Decorative Door Trims to accent the Bi-Fold Glass Doors.

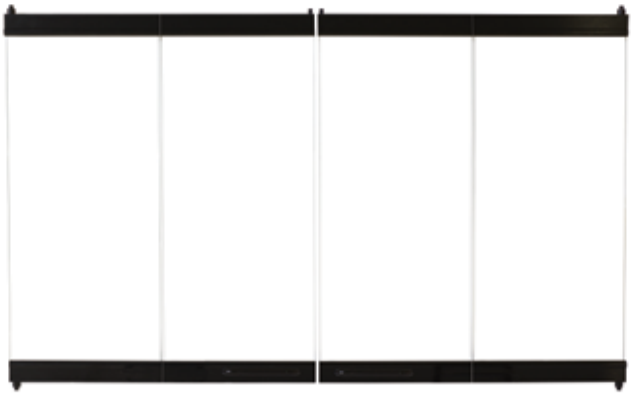

Bi-Fold Glass Doors or Fixed Glass Doors

Platinum

Brushed Brass

Black

EXCLUSIVE FEATURES

- Available in 36” and 42” radiant smooth-faced models
- Dual tube burner uses 6” b-vent
- Millivolt (Remote-ready) or electronic ignition
- Dramatic yellow flames with glowing ember bed
- Detailed ceramic fiber “split oak” log set with log grate
- Three interior options (black painted interior with white stacked hearth, white stacked refractory panels or white herringbone refractory panels)
- Screens retract into hidden screen pockets
- Hidden gas controls with damper safety switch
- Durable textured powder coat finish
- Optional outside air kit for increased performance
- Optional blower and remote controls available for all models
- Dual access pre-wired electrical J-box
- Lifetime limited warranty

FLAT WALL FRAMING SPECIFICATIONS

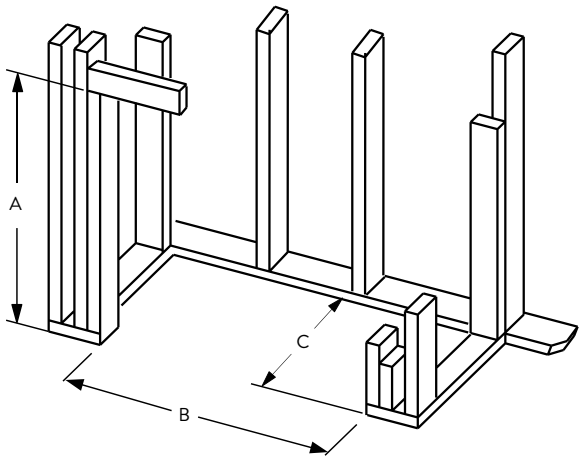

	MISSION 36	MISSION 42
A	40-3/8"	44-3/8"
B	41-1/4"	48-1/4"
C	21-3/8"	23-1/8"

CORNER FRAMING SPECIFICATIONS

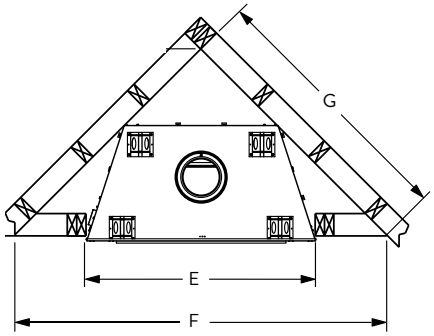

	MISSION 36	MISSION 42
E	41-1/4"	48-1/4"
F	73-7/8"	83-7/8"
G	52-3/16"	59-5/16"

On the cover: Mission 36 with White Herringbone Brick and Split Oak Log Set

IMPORTANT NOTES:
As with any fireplace, this appliance is extremely hot during operation. Read and understand all operating instructions before using this appliance. For further information, consult your dealer.

Local conditions, such as elevation, wind, vent configuration and choice of fuel will affect overall appearance of the fire and heating performance. Performance can also vary with home design and insulation, climate, condition and type of fuel used, appliance location, burn rate, accessories chosen, chimney installation and how the appliance is operated.

Diagrams, illustrations and photographs are not to scale—consult installation instructions. Product designs, materials, dimensions, specifications, colors and prices are subject to change or discontinuance without notice.

APPLIANCE SPECIFICATIONS

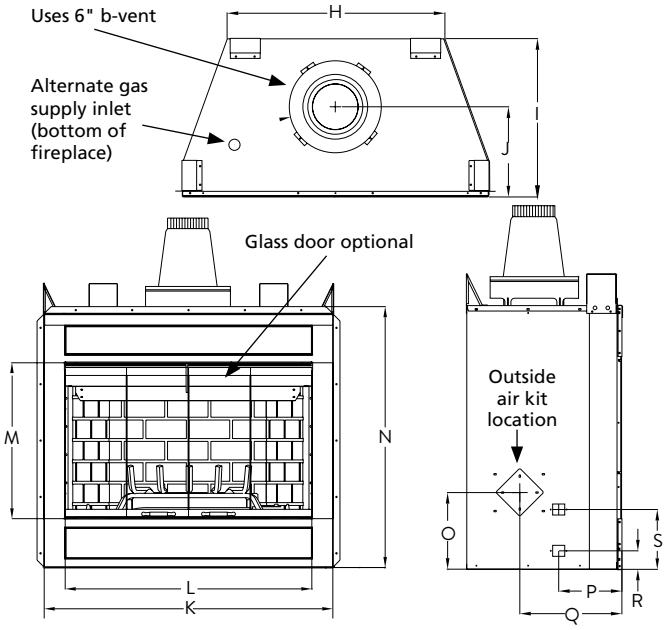

	MISSION 36	MISSION 42
H	29"	36"
I	21-1/4"	23"
J	12"	14"
K	41"	48"
L	34-3/4"	42"
M	21"	24"
N	36"	40"
O	10-1/2"	12-1/2"
P	8-5/8"	10-1/2"
Q	13-7/8"	14"
R	2-1/2"	2-1/2"
S	8-1/8"	8-1/8"

FIREPLACE SPECIFICATION-FIXED BTU INPUT

MODEL	FUEL	BTU/HR
MISSION36TMN	NG	40,000
MISSION36TEN	NG	40,000
MISSION42TMN	NG	45,000
MISSION42TEN	NG	45,000

Approved for use with European Copper and Chimney Classics chimney tops, which improve performance and add an elegant touch.

astria FIREPLACES®

© 2015 Innovative Hearth Products

785377M 01/15

Visit us online

Astria.us.com